GigaSwitch V5 7 Port 54VDC IND Series

Contact
Nexans LAN Systems
Tel.: +49 (0) 2166 27 2220
sales.ans@nexans.com

LANactive 6 Port Managed Full Gigabit Ethernet Switch

- 3 Uplink Ports (2x SFP and 1x RJ45)
- Robust Metal Housing and Compact Hardware Design
- Efficient Energy Management
- Memory Card Slot
- Input voltage range 46 ... 57V DC

-25 ... +65°C

Made in Germany

LANactive
Switch to the future

NEXMAN
ClientController

Description

Nexans LANactive GigaSwitch V5 IND series is designed for the installation in industrial environments. The latest generation of switches is equipped with a state-of-the-art network processor and provides enhanced performance, security and redundancy functionality.

7 Port Version
The GigaSwitch version with seven ports is part of the latest V5 series. This special variant with three uplink ports allows a redundant connection of the GigaSwitche via fibre optic. The RJ45 uplink can be used for connecting an additional Wireless LAN Access Point. All uplinks support Link Aggregation for providing redundancy and double bandwidth up to 2Gbps.

Snap-In Installation and DIN-Rail Installation
The very compact design of the GigaSwitch allows a tool-less snap-in installation into the standard 45 mm cable duct systems or floor boxes without special mounting accessories. The special mounting clip allows also a DIN-Rail installation.

Power over Ethernet
Up to 5x connected Ethernet devices can be supplied with Power over Ethernet. According to the latest IEEE 802.3at (PoE+) standard, up to 30 watts per port are available for each connected device, with total budget of 150 watts.

Memory Card
The optional memory card automatically saves the complete current configuration and firmware of the device. In case of failure, this feature allows an easy exchange of the hardware without additional configuration. In addition, each memory card can be delivered with its own MAC address that is adopted by the switch.

Switch Management and Zero-Touch Configuration
Nexans Device Manager NEXMAN allows a simple and secure configuration of all device parameter of the GigaSwich series. With NEXMAN a larger number of GigaSwitches can be managed and monitored at the same time. In combination with Nexans Zero-Touch Configuration, NEXMAN allows automatic distribution of configurations and firmware updates. A pre-configuration of the switches is not necessary.

Standards

IEEE 802.3
IEEE 802.3u
IEEE 802.3ab
IEEE 802.3af
IEEE 802.3at
IEEE 802.3z
IEEE 802.3x
IEEE 802.1AB
IEEE 802.1D
IEEE 802.1Q
IEEE 802.1X
IEEE 802.1AX
IEEE 802.3ad

Real-Time OS	PoE/PoE+	Compact design	Noiseless	Fast Installation	Redundancy	Operating Temperature	Electromagnetic Shielding
Yes	**Yes**	**45x90mm**	**Yes**	**Yes**	**Yes**	**–25 ... 65 °C**	**Yes**

Nexans

GigaSwitch V5 7 Port 54VDC IND Series

Contact
Nexans LAN Systems
Tel.: +49 (0) 2166 27 2220
sales.ans@nexans.com

Hardware Features

Ordering Information	GigaSwitch V5 TP(PSE+) SFP-2VI 54VDC IND	GigaSwitch V5 TP SFP-2VI 54VDC IND
Article Number	88303960	88303965
Interfaces		
User Ports (RJ45)	4x 1000Base-T	
Uplink Ports (SFP)	2x 100/1000Mbps	
Uplink Ports (RJ45)	1x 1000Base-T	
RJ45 Ports	Auto-Negotiation, MDI/MDI-X Auto-Cross Over and Auto-Polarity	
Eco Mode for RJ45 Ports	Yes	
Rotatable Head Module	Yes	
Power over Ethernet		
Number of PoE User Ports	4x PSE(PoE+) acc. to IEEE802.3at	
Number of PoE Uplink Ports	1x PSE(PoE+) acc. to IEEE802.3at	-
PoE Mode	30W per Port, Mode A, Pin 1-2/3-6	
Max. PoE power budget	150W	120W
Diagnostic Functions (Interfaces)		
Digital Diagnostics Monitoring Interface	Yes	
Twisted Pair Cable Diagnostic	Yes	
General		
Dimensions [W x H x D]	96mm x 45mm x 69mm	
Installation Depth	35mm	
Material	zinc diecasting / stainless steel	
Colour	Pure White, like RAL 9010	
Ambient Temperature	Operation: -25 ... 65°C, Storage: -25 ... 85°C	
Relative Humidity	20 ... 90% (non-condensing)	
Weight	290g	
MTBF	> 750,000h	
Power Supply		
Input Voltage	46 … 57V DC (typ. 54V DC)	
Power Consumption	4.9W (standby) … 5.3W (typ.) ... 6.5W (fully connected)	
Heat Output	23Btu(IT)/h	
Connector	3-pin connector with plug-in terminal (up to 2.5mm²) / (+) (-) (FPE)	
CE - Conformity		
Electro Magnetic Capability Directive	2014/30/EU	
Low Voltage Directive	-	
RoHS 2	2011/65/EU	
Engineering Standards	EN 62368-1, EN 55032, EN 61000-6-2, EN 50581	

GigaSwitch V5 7 Port 54VDC IND Series

Contact
Nexans LAN Systems
Tel.: +49 (0) 2166 27 2220
sales.ans@nexans.com

Software Features

Switching Parameters	
Switching Type	Store-and-Forward, self-learning
Switching Capacity	20Gbps
Packet Forwarding Rate per Port	2x 1.488Mpps
Max. Frame Size	9.600Bytes (Support of Jumbo frames)
Packet Buffer	512 kBytes
Latency (RFC1242)	100Mbps / 64Byte (FIFO/LIFO) 9µs / 9.3µs 100Mpbs / 1518Byte (FIFO/LIFO) 125µs / 4µs 1000Mbps / 64Byte (FIFO/LIFO) 2.7µs / 2.2µs 1000Mpbs / 1518Byte (FIFO/LIFO) 15µs / 2.5µs
MAC-Address Table	8.192 MAC-Addresses
VLANs	IEEE802.1q with up to 256 Groups
Quality of Service Layer 2	IEEE802.1p Class of Service (4 Queues per Port)
Quality of Service Layer 3	RFC2474/3168 DSCP (4 Queues per Port)
Bandwidth Limitation	Bitrate and Number of Packets
Fabric Attach	Basic Fabric Attach Client Support
Management	On-Board High-Performance Management
LEDs	Management, Port Status and Activity, Memory Card
Zero-Touch Configuration	Via NEXMAN Controller
IP-Address	IPv4, IPv6
DHCP-Client	DHCP, DHCPv6
DHCP Relay Agent	Yes
File Transfer	TFTP, SCP
Console Port	V.24 with Nexans Console Cable
Web-Interface	HTTP, HTTPS
Command Line Interface	SSH, Telnet
SNMP	SNMPv1, v2c, v3
Further Management Protocols	Syslog, LLDP, LLDP-MED, CDP
Time Synchronisation	SNTP
Port Statistics	Detailed per Port
Redundancy	
Redundancy Protocols	STP, RSTP, MSTP, MRP
Link Aggregation	LACP
Security	
Password Protection	Two Access Levels (R/W or R/O)
Authentication via Radius	CLI and NEXMAN
Authentication via TACACS+	CLI and NEXMAN
ACL for Management Interface	Up to 16 Access Control Lists
Portsecurity via MAC-Address	Up to 3 predefined MAC-Addresses
Portsecurity via Radius	IEEE802.1x
DHCP Snooping	Yes
Loop and Broadcast Limiter	Yes
Firmware Update	Dual Firmware Image
Configuration-/Reset Button	Yes / Yes (configuration button deactivatable)
Memory Card	Micro SD-Card, optionally with fixed MAC-Address

GigaSwitch V5 7 Port 54VDC IND Series

Contact
Nexans LAN Systems
Tel.: +49 (0) 2166 27 2220
sales.ans@nexans.com

Dimensions

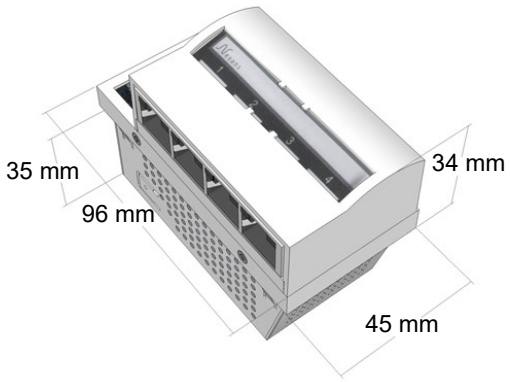

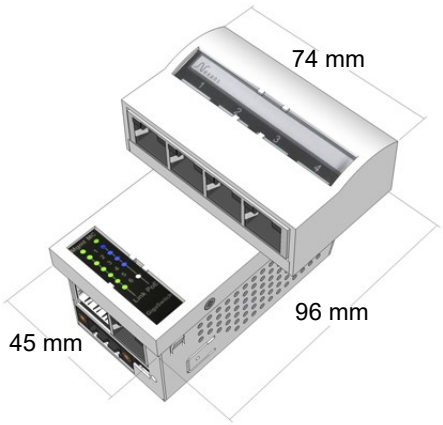

Copyright © Nexans 2021 - Technical changes and modifications reserved.